Artwork guidelines - PLEASE READ

- Must be supplied in **CMYK**.
- **Embed** all images.
- All fonts must be converted to **outlines.**
- Resolution must be **300dpi**.
- Supply artwork as high resolution **PDF** or **Illustrator file.**
- Specify **Pantone** colours for **screen print**.
- Convert all spot colours to process **CMYK** for **digital print**. (Pantone matching cannot be guaranteed)
- Set artwork at **100%** scale.

Graphic Wrap for Hard Trolley Case
Artwork Template

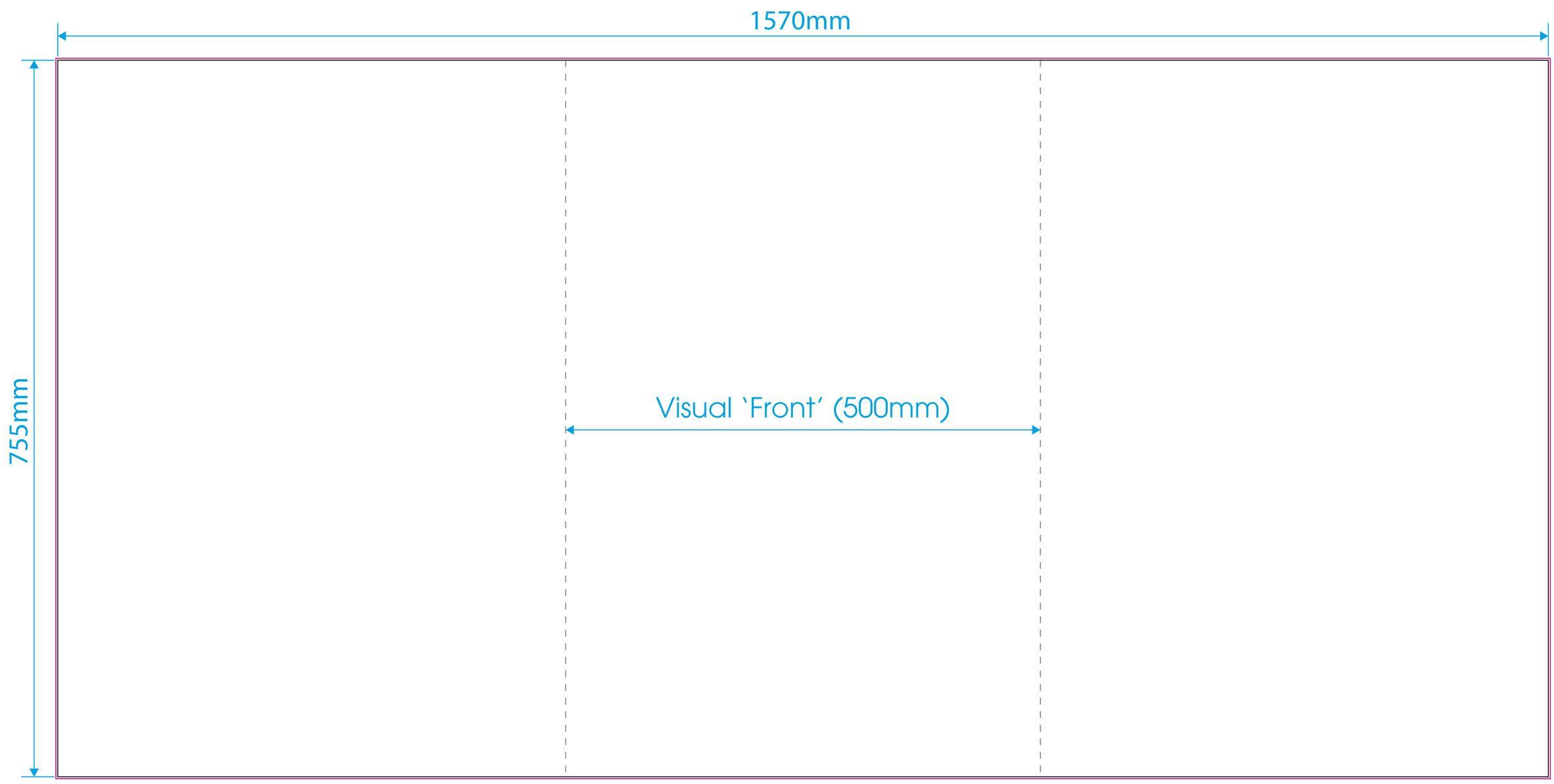

Template guidelines - PLEASE READ

- The **Black** keyline = Finished cut size of the product before assembly.
- The **Pink** keyline = Your background must extend to this line.